Date: Monday, 3/17/2008 11:56:46 AM
User: Kim Johnston

Process Sheet

SPLIT-1

Customer	: CU-DAR001 Dart Helicopters Services	Drawing Name	: STEP EXTRUSION
Job Number	: 38023		
Estimate Number	: 10113		
P.O. Number	:	Part Number	: D2244116
This Issue	: 3/17/2008 S.O. No. :	Drawing Number	: D2244 REV D1
Prsht Rev.	: NC	Project Number	: N/A
First Issue	: / / Type : PURCHASED PARTS	Drawing Revision	: D1
Previous Run	: 33733	Material	:
Written By	:	Due Date	: 4/20/2008 Qty: 110 Um: Each
Checked & Approved By	: 08 03 17		
Comment	: Est: A 24.03.04 New Issue KJ		

Additional Product

Job Number:

Seq. #:	Machine Or Operation:	Description :
1.0	PG	PURCHASING

Comment: PURCHASING
Issue P/O: 5935
a) Extrude as per Dwg D2244
b) Material: 6061-T6 (QQ-A-200/8)
c) Minimum yield tensile strength = 35 ksi
d) Minimum ultimate tensile strength = 38 ksi
e) Minimum elongation = 8%
f) Order at 116" long
g) Caradon Indalex Tool # MH-18865
h) To be packed per DSK 066
i) Pull test to ASTM standard B221 required.
j) Material certification is required

CL08/03/18

110

2.0	D2244116P	Step Extrusion

Comment: Qty.: 1.0000 Each(s)/Unit Total : 110.0000 Each(s)
STEP EXTRUSION

3.0	PACKAGING 1	PACKAGING RESOURCE #1

Comment: PACKAGING RESOURCE #1
Receive & Inspect For Transit Damage
Ensure certification are attachec

08/04/28 81

4.0	QC6	DIMENSIONAL CHECK

Comment: DIMENSIONAL CHECK
Check Pull test per Dwg D2244 for compliance page attached.
Check hardness with Webster tester

08/04/21 (86)

Dart Aerospace Ltd

W/O:		WORK ORDER CHANGES					
DATE	STEP	PROCEDURE CHANGE	By	Date	Qty	Approval Chief Eng / Prod Mgr	Approval QC Inspector

Part No: _____ PAR #: _____ Fault Category: _____ NCR: Yes No DQA: _____ Date: _____

QA: N/C Closed: _____ Date: _____

NCR:		WORK ORDER NON-CONFORMANCE (NCR)						
DATE	STEP	Description of NC Section A	Corrective Action Section B			Verification Section C	Approval Chief Eng	Approval QC Inspector
			Initial Chief Eng	Action Description Chief Eng	Sign & Date			

NOTE: Date & initial all entries

Date: Monday, 3/17/2008 11:56:46 AM
User: Kim Johnston

Process Sheet

Customer: CU-DAR001 Dart Helicopters Services

Drawing Name: STEP EXTRUSION

Job Number: 38023

Part Number: D2244116

Job Number:

Seq. #:	Machine Or Operation:	Description :
5.0	PACKAGING 1	PACKAGING RESOURCE #1

Comment: PACKAGING RESOURCE #1
Identify and Stock (lin feet)
Location: GA

08/04/22 (81)

6.0	QC21	FINAL INSPECTION/W/O RELEASE

08/04/22

Comment: FINAL INSPECTION/W/O RELEASE

Job Completion

08.04.22

Form: process

Dart Aerospace Ltd

W/O:		WORK ORDER CHANGES					
DATE	STEP	PROCEDURE CHANGE	By	Date	Qty	Approval Chief Eng / Prod Mgr	Approval QC Inspector

Part No: _____ PAR #: _____ Fault Category: _____ NCR: Yes No DQA: _____ Date: _____

QA: N/C Closed: _____ Date: _____

NCR:		WORK ORDER NON-CONFORMANCE (NCR)						
DATE	STEP	Description of NC Section A	Corrective Action Section B			Verification Section C	Approval Chief Eng	Approval QC Inspector
			Initial Chief Eng	Action Description Chief Eng	Sign & Date			

NOTE: Date & initial all entries

H:\fFORMS\Quality Assurance\approved QA\NCRWO RevD

DESIGN	DRAWN BY	DART AEROSPACE LTD HAWKESBURY, ONTARIO, CANADA	
BW			
CHECKED KE	APPROVED	DRAWING NO. D2244	REV. D SHEET 1 OF 1
DATE 98.11.18		TITLE STEP EXTRUSION	SCALE 1:1

RELEASED 98.11.25 KE

A	94.07.05	NEW ISSUE
B	94.07.11	REDESIGNED
C	94.08.08	REDESIGNED
D	98.11.18	REMOVED 6005A MATERIAL INCORPORATED DEO 9081
D1	01.04.17	ADDED DIE #

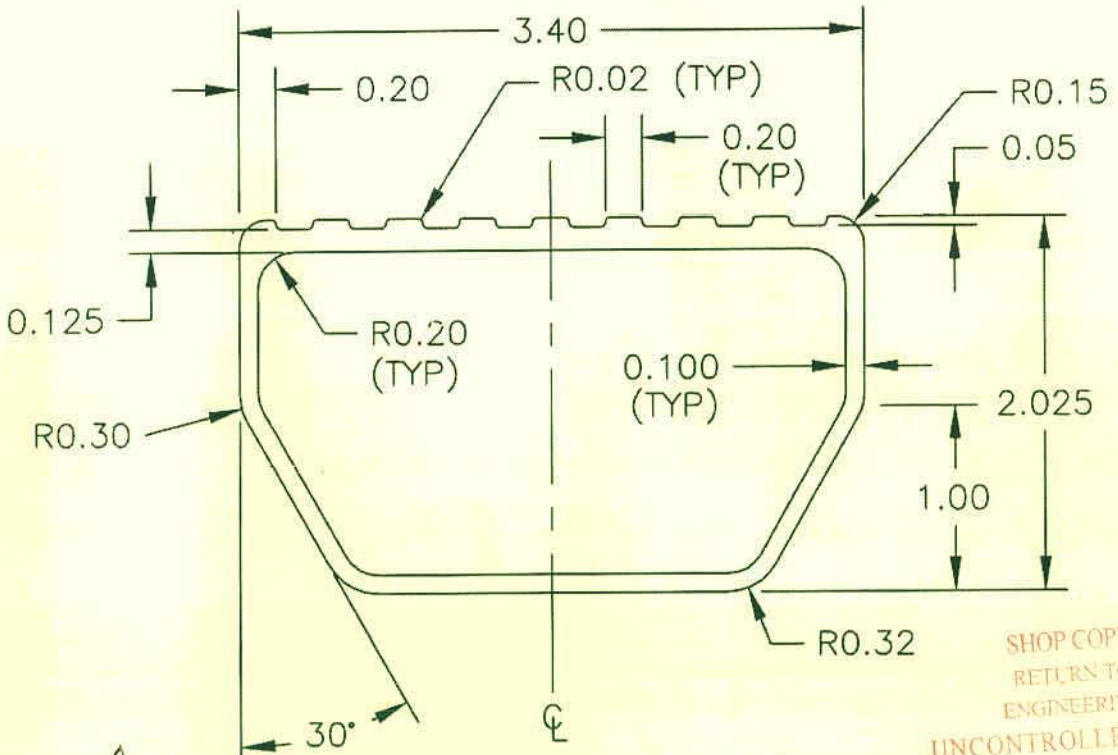

D1 MANUFACTURED USING CARMOON INDALEX DIE # MH-18865

SHOP COPY
RETURN TO
ENGINEERING
UNCONTROLLED COPY
SUBJECT TO AMENDMENT
WITHOUT NOTICE
WORK ORDER
NO. 38023

PART NUMBER D2244-XX.X
XX.X IS CUT LENGTH IN INCHES

MATERIAL: 6061-T6 (QQ-A-200/8)

A SAMPLE FROM EACH BATCH WILL BE PULL TESTED TO ASTM STANDARD B221 BY AN APPROVED TESTING FACILITY TO ENSURE THAT THE BATCH MEETS THE MINIMUM MECHANICAL PROPERTIES STATED BELOW:

MINIMUM TENSILE YIELD STRENGTH = 35 ksi
MINIMUM ULTIMATE TENSILE STRENGTH = 38 ksi
MINIMUM ELONGATION = 8%

TOLERANCES ARE PER DART QSI 018 UNLESS OTHERWISE NOTED
ALL DIMENSIONS ARE IN INCHES UNLESS OTHERWISE NOTED

INDALEX
SOLUTIONS D'ALUMINIUM

INDALEX LIMITED
325, RUE AVRO
POINTE-CLAIRE (QUÉBEC) H9R 5W3

PROFILÉS D'ALUMINIUM · ANODISATION · FABRICATION · PEINTURE
ALUMINUM EXTRUSIONS · ANODIZING · FABRICATION · PAINTING

P/S#: 654244

NOTRE NUMÉRO DE COMM. / OUR ORDER NO.
8032434 1

FACTURER À / SOLD TO
DART AEROSPACE LTD
1270 ABERDEEN STREET
HAWKESBURY, ONT

K6A1K7

EXPÉDIER À / SHIP TO

CUSTOMER P.S.T.: *6122-5207

INDALEX G.S.T. REG NO: R136834041

PROJ:
Required Date:

N° DU CLIENT / CUST. NO.	T.P.S. / G.S.T.	TAXE DE VENTE PROV. / PROV. SALES TAX	N° DE COMM. DU CLIENT / CUST. ORDER NO.	DATE DE COMMANDE / ORDER DATE	NOTRE DATE DE COMM. / OUR ORDER DATE	COND. DE TEMPS
201355	XXXXXX		5935	8/03/18	8/03/18	

VENDEUR / SALESMAN	EXPÉDIÉ PAR / SHIP VIA	PAYÉ / PPD.	PERC. / COL.	C.A.D. / C.O.D.	F.A.P. / F.O.B.	EN BALLOTS / BUNDLED AND TAPED	CARTONNÉ / CARTONED	CARTONNÉ & INTERCALÉ / CARTONED & INTERLEAVED
51		X						

DATE DE L'EXPÉDITION / DATE SHIPPED	EXPÉDIÉ PAR / SHIPPED VIA
8/04/17	OTTAWA 18 AVRIL

N° ITEM / ITEM NO.	COMMANDE / ORDERED: POIDS / WEIGHT	COMMANDE / ORDERED: PIÈCES / PIECES	N° DE MATRICE / INDALEX DIE NO.	DESCRIPTION DU CLIENT / CUSTOMER DESCRIPTION	ALLIAGE ET TREMPAGE / ALLOY AND TEMPER	LONGUEUR / LENGTH	PRIX UNITAIRE / UNIT PRICE	CETTE EXPÉDITION / THIS SHIPMENT: POIDS / WEIGHT	CETTE EXPÉDITION / THIS SHIPMENT: PIÈCES / PIECES	CETTE EXPÉDITION / THIS SHIPMENT: BALLOTS / BDLES	CETTE EXPÉDITION / THIS SHIPMENT: POIDS / WEIGHT	CETTE EXPÉDITION / THIS SHIPMENT: PCES / PCS.	MONTANT / AMOUNT
				F EXTRUDE ONLY									
				DUE=2008/04/18 04-18									
1	639	110	MH 18865 D2244116P		6061	T6	2946			2	464	81	POIDS EN KGS
				STEP EXTRUSION									
				BUNDLE= 819971 819994									

We hereby certify that the material supplied meets the chemical properties as published by the Aluminum Association, and requirements of our Quality procedures

ISO 9001

S. Pennino

8/4/08

EXEMPLAIRE DE LA COMPTABILITÉ
ACCOUNTING COPY

.ndalex Limited

REPORT ID: PPC042R ** CUSTOMER OPEN ORDER STATUS REPORT ** BRANCH: 2 4/08/08
USER ID: IXPROD2 FOR CUSTOMER: 201355 DART AEROSPACE LTD DUE: 20070501 AND FORWARD INSIDE REP: ANNIE BISSONNEITE PAGE 1 11:02:42

P B	Due Date	Cust Part Number	P R	Order	GR CD	Cust P.O.	S H	Die No. X	E Ctrl No.	Tas Prc	Finish Colour	Finish Length	UNITS To Extr	Stock	UNITS Sched	WIP	UNITS To Pack	Ready To ship	In Transit	UNITS Shipped	F R	G U	Ordered UNITS	J M
2	8/04/18	04-1B D2244116P	3	8032434	1	01 5935	MH	18865	71006	02		2946 MN			109	82		36			P		110	PC

**** END OF REPORT ****

SH-S=Hold EX-Q=DoNotExtrude FR-Q=PDC $=COD C=COL P=PPD U=P/D T=T/P OV-M=MultiVendor

INDALEX
ALUMINUM SOLUTIONS

INDALEX LIMITED
525 AVRO Street
POINTE-CLAIRE, QC H9R 5W3
TELEPHONE: (514) 697-5120 & (800) 563-5120
FACSIMILE: (514) 694-8310 & (800) 563-8310

FACSIMILE TRANSMITTAL SHEET

TO: Christina Young	FROM: Bruno Morency Quality Technician
COMPANY: DART AEROSPACE LTD	DATE: 2008/04/09
FAX NUMBER: 1(613) 632-4443	TOTAL NO. OF PAGES INCLUDING COVER: 2
PHONE NUMBER:	SENDER'S REFERENCE NUMBER:
SUBJECT: REPORT	TIME:

☐ URGENT ☐ FOR REVIEW ☐ PLEASE COMMENT ☐ PLEASE REPLY ☐ PLEASE RECYCLE

NOTES/COMMENTS:

Mechanical properties report.

INDALEX
ALUMINUM SOLUTIONS

325 rue Avro
Pointe-Claire QC H9R 5W3

Téléphone (514) 697-5120
Fac-simile (514) 694-8310

Rapport des propriétés mécaniques
Mechanical Properties Test Report

Client / Customer : **DART AEROSPACE LTD**

Adresse / Address : **270 ABERDEEN STREET HAWKESBURY ONT, K6A 1K7**

commande Indalex / Indalex order # : **8032434**

bon de commande / Purchase order # : **5935**

de matrice / Die # : **MS 18865** Description : **Step Extrusion**

Alliage & trempage / Alloy & temper : **6061 T6**

Contrôle / Control # : **71006-2**

Coulée / Cast # : **43000**

	Min.requis Min.required	Résultat actuel Actual results
Tension ultime Ultimate stress (psi)	38 000	39649
Contrainte élastique Yield stress (psi)	35 000	35658
% élongation dans 2" % elongation in 2"	8	12
Dureté Rockwell E (hre) Rockwell E Hardness (hre)	88 @ 100	89

Composition chimique typique / Typical chemical composition :

	Si	Fe	Cu	Mn	Mg	Cr	Zn	Ti
6063	0,20 - 0,60	0,35 Max	0,10 Max	0,10 Max	0,45 - 0,90	0,10 Max	0,10 Max	0,10 Max
6005	0,60 - 0,90	0,35 Max	0,10 Max	0,10 Max	0,40 - 0,60	0,10 Max	0,10 Max	0,10 Max
6005A	0,68 - 0,72	0,15 - 0,27	0,08 - 0,12	0,20 – 0,24	0,48 – 0,52	0,03 Max	0,05 Max	0,03 Max
6061	0,40 - 0,80	0,70 Max	0,15 – 0,40	0,15 Max	0,80 – 1,20	0,04 - 0,35	0,25 Max	0,15 Max
6351	0,7 - 1,3	0,5 Max	0,10 Max	0,40 - 0,80	0,40 - 0,80	—	0,20 Max	0,20 Max

Nous certifions que le matériel fourni rencontre les exigences chimiques telles qu'annoncées par la norme ASTM B-221 excepté pour la section 8.2 (nombre de spécimen) et AMS QQA 200/8 excepté pour la section 4.2.3.1 (nombre de spécimen) qui sont déterminés par les exigences du client.

We hereby certify that the material supplied meets the chemical properties as published by the ASTM B-221 except for section 8.2 (number of specimen) and AMS QQA 200/8 except for section 4.2.3.1 (number of specimen) which is determined by customer requirement.

Sincèrement vôtre,
Yours truly,

date : **2008-04-09**

Bruno Morency
Technicien de la qualité
Quality technician

Indalex Limited